ICONHIC 2016
1st International Conference on Natural Hazards & Infrastructure
28-30 June, 2016, Chania, Greece

Seismic Response of Cantilever Retaining Walls: Verification of Centrifuge Experiments

E. Garini[1], L. Tsantilas, and G. Gazetas
Soil Mechanics Laboratory, National Technical University, Athens, Greece

ABSTRACT

Numerical investigation of the seismic response of an inverted T-shape flexible cantilever wall in a two-layered sand soil stratum subjected to horizontal strong ground accelerations, is presented in this paper. The main scope is to verify the centrifuge results of Mikola and Sitar (2013) study on cantilever T-shaped retaining walls. An interface wall-soil interaction is considered, allowing for separation and sliding. Both in the test and our analyses several near-fault ground motions recorded in notorious earthquakes (Kocaeli 1999, Kobe 1995, Loma Prieta 1989) are employed. Three of them are presented herein in detail: Yarimca, Takatori, and Santa Cruz. Results are presented in terms of acceleration time histories, elastic acceleration spectra, maximum wall moment distributions, and dynamic soil pressures. Comparison with the Mononobe-Okabe method is performed as well, and practically significant conclusions are drawn.

Keywords: flexible cantilever wall, centrifuge verification, Mononobe-Okabe, bending moments

INTRODUCTION: CANTILEVER RETAINING WALLS

A cantilever retaining wall generally consists of a vertical part connected to a slab foundation, while its stability mechanism is based on the action of back-fill soil (Figure 1). Cantilever walls restrain retained earth by the passive resistance provided by the soil below the excavation. The major advantage of cantilever walls is their simple construction. However, they are not recommended to use next to adjacent buildings if strict horizontal displacement limits exist. Control of lateral wall displacements is the major design objective, depending on the mobilization of passive earth resistance.

Cantilever walls, in practice, are designed with limit equilibrium methods. The Mononobe-Okabe method (1926), an extension of Coulomb's method, is the earliest and most widely used analytical method. It gives the total active thrust acting on the wall by applying a pseudostatic inertial force on the soil wedge. Despite its known drawbacks, the classic pseudo-static Mononobe–Okabe (M–O) formula is still the main method proposed for the analysis of yielding walls. Since then numerous analytical, experimental, and numerical studies have been published for the dynamic behavior of retaining walls. The M–O method had been modified and simplified by Seed & Whitman (1970). Richards & Elms (1979) determined permanent (inelastic) outward displacements, and Nadim & Whitman (1983) permanent sliding and rotation using the Newmark sliding block concept. Veletsos and Younan (1994) modelled the soil as an elastic medium and obtained elastodynamic solutions. Several other studies have also appeared, among which: AI-Homoud & Whitman (1994), Wu & Prakash (1999), Green & Ebeling (2002), Cameron & Green (2004), Gazetas et al. (2004), Huang (2005), Psarropoulos (2005), Dakoulas & Gazetas (2008). In parallel, a significant effort was made in numerical study of seismic earth pressures in centrifuge experiments by Ortiz et al. (1983), Cai & Bathurst (1995), Zeng (1998), Theodorakopoulos et al. (2001), Nakamura (2006), Madabhushi & Zeng (2007), Al Atik & Sitar (2010), and most recently by Mikola & Sitar (2013).

[1] Corresponding Author: E. Garini, *National Technical University, Athens, Greece, geocvemp@yahoo.gr*

The scope of this paper is to shed some light into fundamental aspects of seismic response of cantilever retaining walls subjected to near-fault ground shaking, by numerical verification of the centrifuge experiments of Mikola and Sitar (2013); experiments which will be presented in the following section.

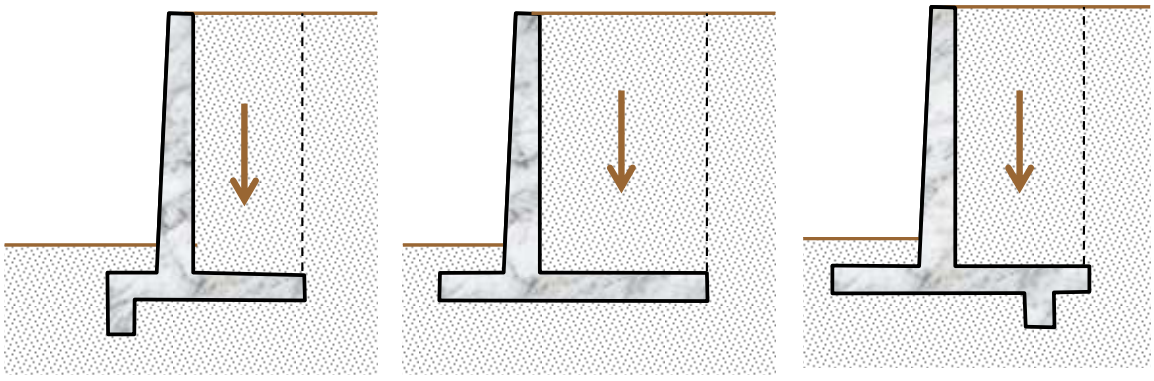

Figure 1. Sketches of several cantilever retaining wall configurations. Their stability is mainly depend on the weight of the back-fill soil.

Figure 2. The large centrifuge payload bucket at the Center for Geotechnical Modeling at U.C. Davis.

THE CENTRIFUGE EXPERIMENT

Two centrifuge experiments were performed by Mikola and Sitar (2013) on the dynamic centrifuge at the Center for Geotechnical Modeling at the University of California, Davis. The centrifuge has a radius of 9.1 m, and an available bucket area of 4 m^2 as pictured in Figure 2. The shaking table can operate up to a maximum centrifugal acceleration of 75 g. For the particular experiments the centrifugal acceleration used in was 36 g. The first centrifuge experiment, named ROOZ01, was performed on uniform dense sand, whereas the second centrifuge experiment, ROOZ02, on a two-layer sand model. In this study, we are interested to verify numerically the results of the second experiment.

The ROOZ02 model consisted of a non-displacing U-shaped cantilever and a displacing inverted T-shaped retaining wall. The structures were founded on approximately 12.5 m of dry dense sand (D_r = 80%) and support a dry medium-dense sand backfill (D_r = 75%) as can be seen in Figure3. The model soil was dry Nevada Sand. Retaining structures were constructed of T6061 aluminum plate. The displacing inverted T-shaped cantilever wall was constructed by a base plate and a wall stem. Geometry and dimensions of the cantilever wall in prototype scale is pictured in Figure 4. Ten shaking events were applied to the ROOZ02 model in flight. The excitations examined herein, are: the Yarmica recorded ground motion during the 1999 Kocaeli earthquake, the Santa Cruz shaking by the 1989 Loma Prieta event, and the Takatori ground motion of the 1995 Kobe earthquake.

Six types of electronic transducers were employed for measuring in the experiment: accelerometers, strain gages, pressure transducers, linear potentiometers, variable differential transformer, and load cells. With these devices were evaluated the acceleration on the retaining wall and backfill soil, the bending strains and deflections, the backfill settlements, and the lateral earth pressures acting on the cantilever wall.

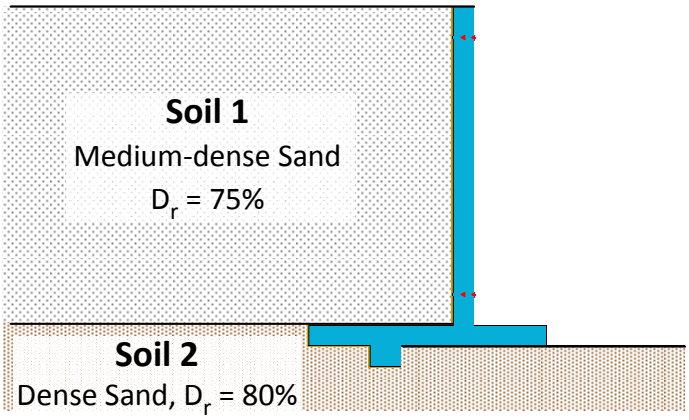

Figure 3. Sketch of inverted T-shaped cantilever wall verified in this study, showing the foundation and backfill soil characteristics.

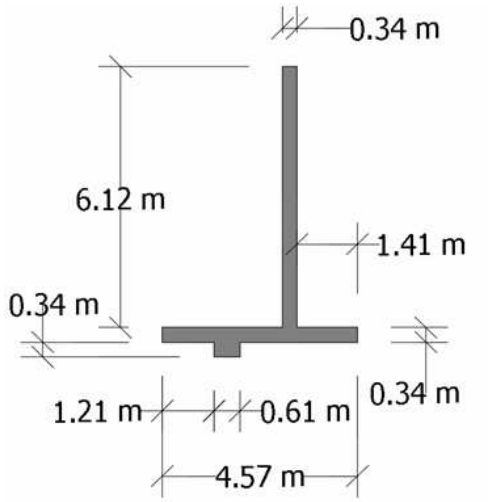

Figure 4. Geometry and dimensions of the cantilever wall in prototype scale.

VERIFICATION: FINITE ELEMENT MODEL AND MATERIALS

A 2-D plane-strain finite element model was constructed using the ABAQUS commercial code. The discretization consists of four-noded quadrilateral, plane-strain elements. As shown in Figure 5, the model includes two identical walls, one opposite to the other, to ameliorate the lateral boundary effects, and to examine the effect of the inherent asymmetry of the accelerogram ("polarity" effect) in a single dynamic analysis (Gazetas et al. 2009, Garini et al. 2011). Interface between wall and soil appropriately modeled as tension-less but frictional; it is simulated with special elements that allow both separation and sliding, the latter controlled by coefficients of friction μ. To capture radiation damping, normal and shear viscous elements ρV_S and ρV_P (per unit area) are placed at the vertical boundaries between the soil domain and the vertical free-field columns which are introduced on each side in order to have proper transmission of up-coming waves thus, avoiding the box effect.

The geometrical limits of the model are 60 m behind each wall. In order to avoid any interaction between the two walls, they were placed at a distance of 50 m. The soil properties are: (i) for the retained soil: ρ_1 = 1.695 Mgr/m^3, E_1 = 450 MPa, $\varphi_1 = 35^o$, $\psi_1 = 5^o$ and c_1 = 2 kPa; (ii) for the foundation soil: ρ_2 = 1.695 Mgr/m^3, E_2 = 675 MPa, $\varphi_2 = 42.5^o$, $\psi_2 = 12.5^o$ and c_2 = 3 kPa. The wall is made from concrete and its behavior presumed to be elastic. The coefficient of friction is μ = 0.34 between the retaining wall and the foundation and backfill soil.

Soil behavior is described by a refined soil model developed by Gerolymos et al (2006) and Anastasopoulos et al (2011), utilized through a subroutine attached to ABAQUS. It models the nonlinear soil inelasticity through a simple kinematic hardening with Von Mises failure criterion and an associative flow rule. The evolution law consists of two components: a nonlinear kinematic hardening component describing the translation of the yield surface in stress space, and an isotropic hardening component which defines the size of the yield surface as a function of plastic deformation. Details and validation of the model can be found in the afore-cited references.

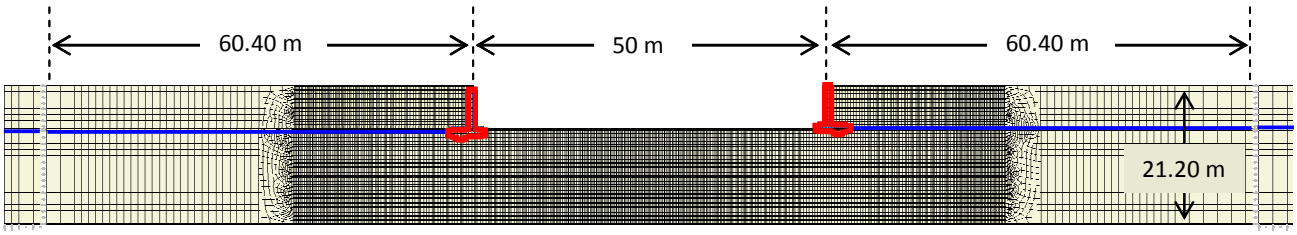

Figure 5. The ABAQUS finite element model configuration.

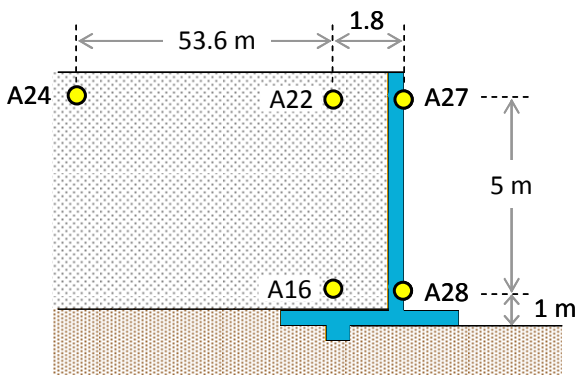

Figure 6. Geometry of characteristic points where our analysis results are focused. In those points, accelerometers were located in the centrifuge experiment. The nomenclature is the same with the one of Mikola & Sitar (2013) report.

VERIFICATION: RESULTS

The verification is performed in terms of acceleration time-histories (and their corresponding elastic spectra), maximum bending moments of the wall, and soil pressure timehistories. All results are presented in terms of prototype units and they refer to five characteristic points shown in Figure 6. The nomenclature of these points is the same with the one in the report of Mikola & Sitar (2013). For the sake of brevity, only a minimum of all the parametric results are presented below. Figure 7 illustrates the acceleration timehistories in points A_{16}, A_{22}, and A_{27} induced by the Takatori excitation. The black solid line corresponds to centrifuge and the red solid line to our numerical analysis. The very good agreement between the experiment and the analytical response is evident. Not only the maxima are captured but also the smaller details of the motion. Also, the frequency content of the accelerograms is reproduced as well. The agreement of the frequency-amplitude is portrayed better in terms of response spectra in Figure 8. Either at the wall points (A_{27}, A_{28}) or the backfill soil (A_{16}, A_{22}, A_{24}), numerical response is very close to the experimental one, and this is true not only for the Takatori excitation but for Yarimca and Santa Cruz too.

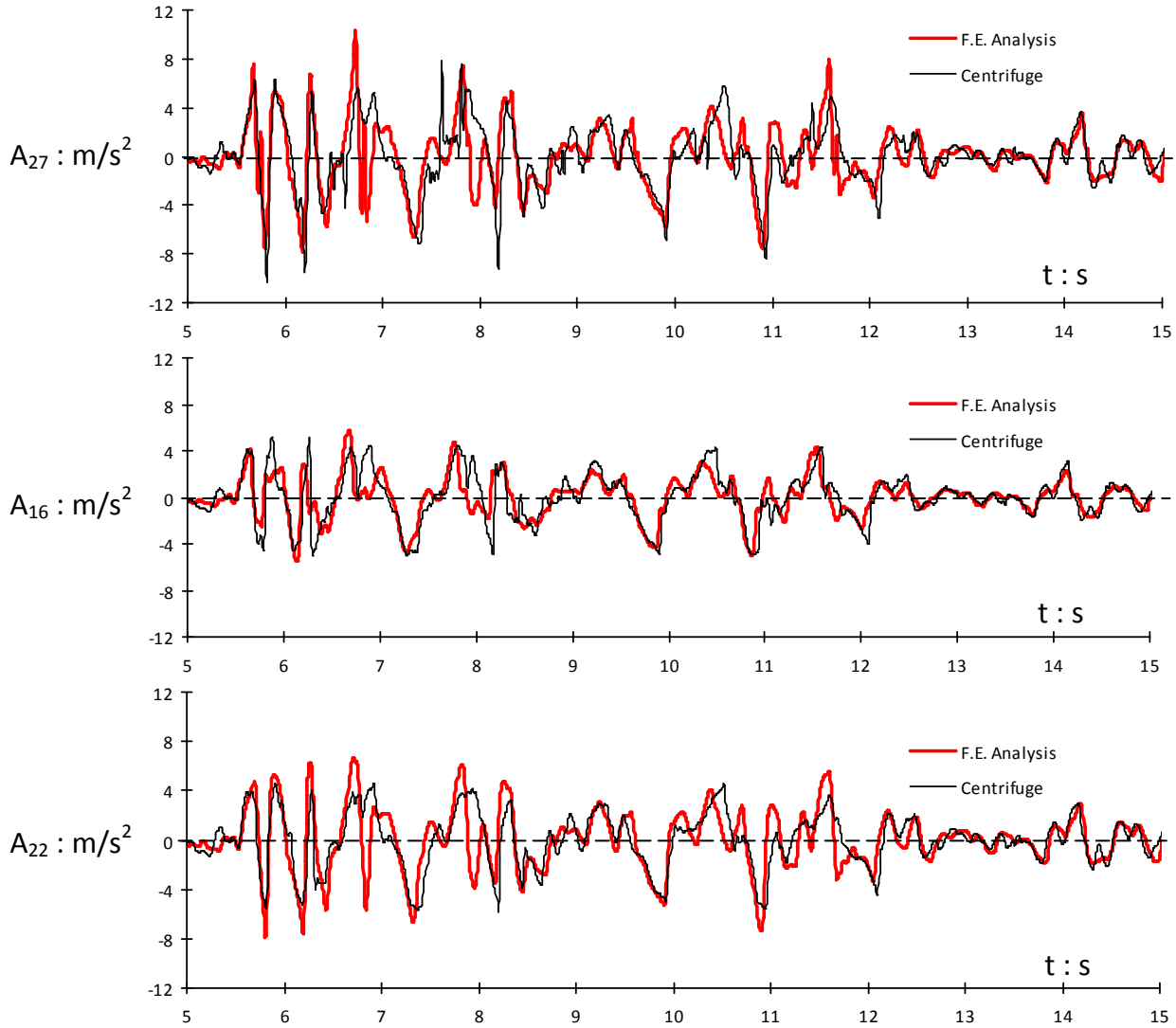

Figure 7. Comparison of acceleration time histories at three characteristic points. In black is pictured the centrifuge experiment results, and with red the analytical ones. [Excitation: Takatori]

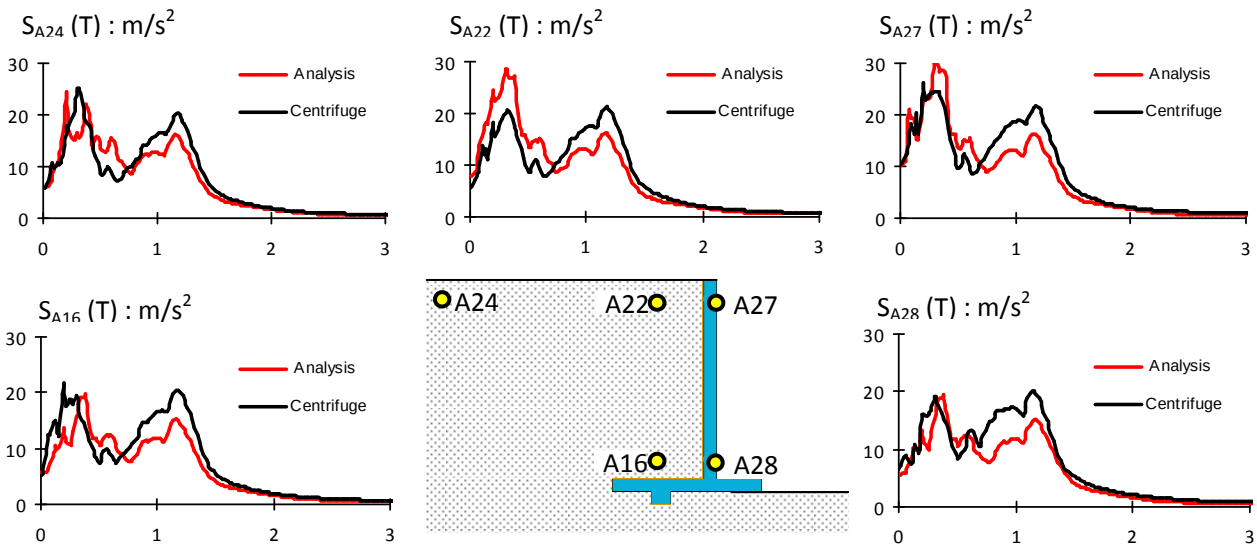

Figure 8. Acceleration response spectra at the characteristic points: with red the analysis results and with black the experimental data. [Excitation: Takatori]

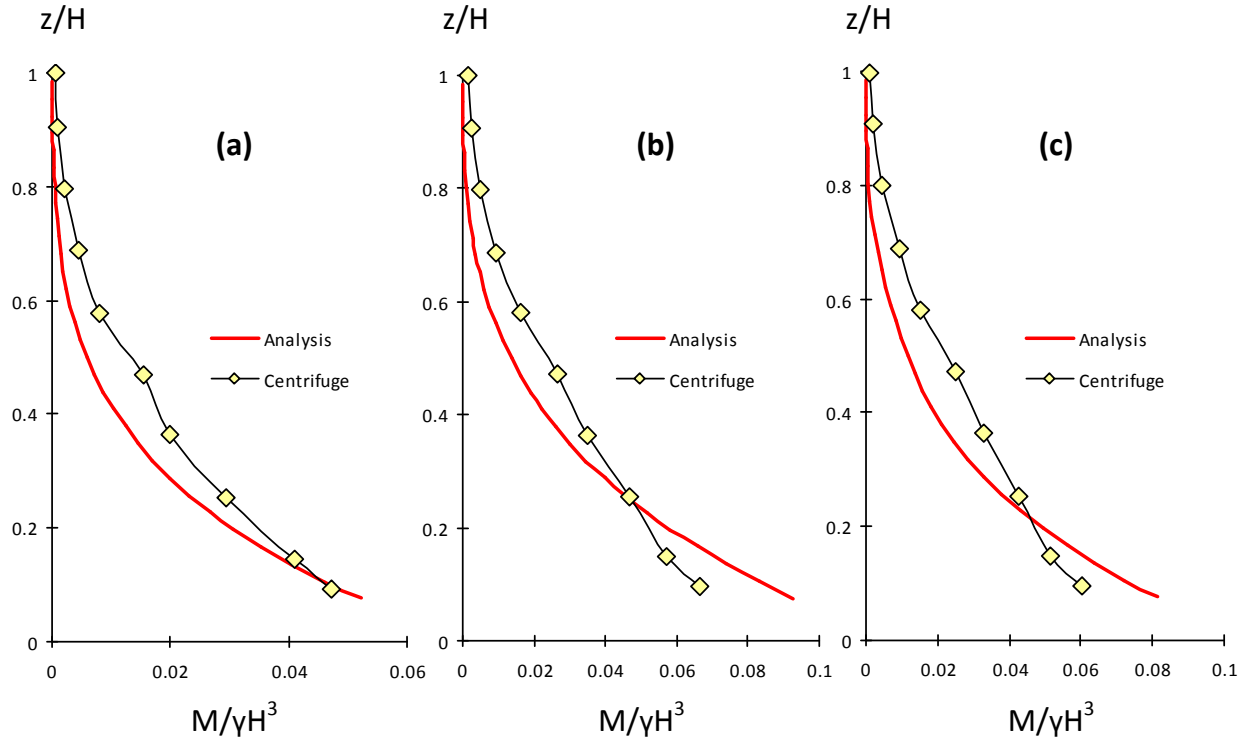

Figure 9. Comparison of dimensionless bending moment of the wall: (a) for the Yarimca, (b) the Takatori, and (c) Santa Cruz excitations.

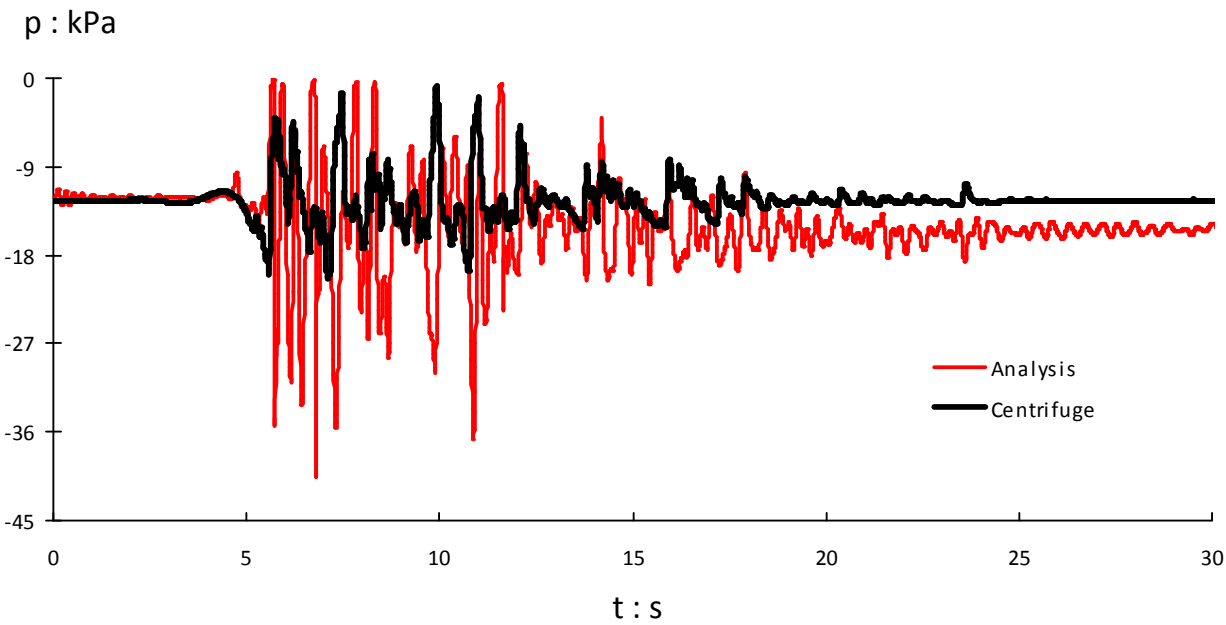

Figure 10. Normal soil pressure, p, time history 2.5 m below the top of the wall. Excitation: Takatori.

So, in the microscale of soil/structure point agreement is achieved, but is this valid in the macroscopic level of the whole system? To answer this question, the distribution of maximum bending moments of the vertical part of the wall from the centrifuge experiment is compared with the numerical response. To this end, Figure 9 depicts the comparison of the dimensionless wall bending moment, $M/\gamma H^3$, with depth over wall's height, z/H, for all three studied ground motions. The centrifuge data are plotted with the yellow diamond shaped line and the F.E. results with the red solid line. In all cases, the comparison between the experiment and the numerical analyses is satisfactory. No large diversions are observed and the trends are quite the same.

However, not all of our results were in agreement with the experimental ones. A consistent discrepancy is noticed in the normal soil pressures, p, and an example can be seen in Figure 10. Notice that experimental response with the black line is strongly one-sided, a fact difficult to interpret. Fortunately, both (analysis and experiment) start from the same initial soil pressure of 12 kPa which corresponds to the geostatic condition. It has to be mentioned, that in the experiment soil pressures, p, were recorded by pressure sensors and were filtered using a low-pass Butterworth filter to reduce noise. In the experiment report, Mikola & Sitar state that the pressure transducers, employed to measure p, have a manufacturer stated frequency response up to 100 Hz, which is sufficient for static earth pressures but they have difficulties to capture dynamic earth pressures because centrifuge scaling requires a sensor with at least 500-700 Hz frequency sensitivity to fully record dynamic earth pressures. Maybe this is a reason of the experimental versus numerical soil pressures difference.

CONCLUSIONS

The paper verified numerically the seismic response of a typical cantilever retaining wall comparing them with experimental centrifuge results conducted by Mikola and Sitar (2013). 2-D analyses were conducted and the response of the retaining wall was investigated for the Takatori, Yarimca and Santa Cruz ground motions. Agreement was obtained for detailed acceleration timehistories at several characteristic points of the wall and the backfill soil and for bending moment distribution. Yet, the soil pressure timehistories presented substantial differences between the analysis and the experiment, mainly due to the pressure transducers frequency limitation.

REFERENCES

Al Atik L and Sitar N. Seismic earth pressures on cantilever retaining structures. *Journal of Geotechnical and Geoenvironmental Engineering*, 2010, 136(**10**): 1324-1333.

Al-Homoud AS and Whitman RV. Seismic analysis and design of rigid bridge abutments considering rotation and sliding incorporating non-linear soil behavior. *Soil Dynamics and Earthquake Engineering*, 1999, 18: 247-277.

Anastasopoulos I, Gelagoti F, Kourkoulis R and Gazetas G. Simplified constitutive model for simulation of cyclic response of shallow foundations: validation against laboratory tests. *Journal of Geotechnical and Geoenvironmental Engineering*, 2011, 137(**12**): 1154-1168.

Cai Z, Bathurst RJ. Seismic response analysis of geosynthetic reinforced soil segmental retaining walls by finite element method, *Computers & Geotechnics*, 1995, 17(**4**): 523-546.

Cameron WI and Green RA. Development of engineering procedure for evaluating lateral earth pressures for seismic design of cantilever retaining walls. *5th International PhD Symposium in Civil Engineering*, 2004, A.A. Balkema Publishers, Vol. 2: 897-904.

Dakoulas P, Gazetas G. Insight into seismic earth and water pressures against caisson quay walls, *Géotechnique*, 2008, 58(**2**): 95–111.

Garini E, Gazetas G, and Anastasopoulos I. Asymmetric 'Newmark' Sliding Caused by Motions Containing Severe 'Directivity' and 'Fling' Pulses, *Géotechnique*, 2011, 61(**9**): 733-756.

Gazetas G, Garini E, Anastasopoulos I and Georgarakos T. Effects of Near-Fault Ground Shaking on Sliding Systems, *J. Geotech. Geoenv. Engrg.*, 2009, 135(**12**): 1906–1921.

Gazetas G, Psarropoulos PN, Anastasopoulos I and Gerolymos N. Seismic behavior of flexible retaining systems subjected to short-duration moderately strong excitation. *Soil Dynamics and Earthquake Engineering*, 2004, 24(**7**): 537-550.

Gerolymos N, Gazetas G. Static and Dynamic Response of Massive Caisson Foundations with Soil and Interface Nonlinearities-Validation and Results, *Soil Dynamics & Earthquake Engineering*, 2006, 26(**5**): 377-394.

Green RA and Ebeling RM. Seismic analysis of cantilever retaining walls, Phase I. *Earthquake Engineering Research Program*, U.S. Army Corps of Engineers, 2002, Washington, DC.

Huang C.C. Seismic displacement of soil retaining walls situated on slope, *J. Geotech. Geoenv. Engrg.*, 2005, 31(9): 1108–1117.

Madabhushi SPG and Zeng X. Simulating Seismic Response of Cantilever Retaining Walls. *Journal of Geotechnical and Geoenvironmental Engineering*, 2007, 133(**5**): 539-549.

Mikola GR and Sitar N. Seismic earth pressures on retaining structures in cohesionless soils. *Report No. UCB GT 13-01*, 2013, Geotechnical Engineering, Dep. of Civil and Environ. Engineering, Univ. of California, Berkeley.

Mononobe N and Matsuo M. On the determination of earth pressures during earthquakes. *World Engineering Congress*, 1929, 133(**5**): 539-549.

Nadim F, Whitman RV. Coupled sliding and tilting of gravity retaining walls, *J. Geot. Eng. Divis.*, 1983, 109(**7**): 915–931.

Nakamura S. Re-examination of Mononobe-Okabe theory of gravity retaining walls using centrifuge model tests. *Soils Found.*, 2006, 46(**2**):.135-146.

Okabe S. General theory on earth pressure and seismic stability of retaining wall and dam. *J. Japan Society of Civil Engineers*, 1924, 10(**6**): 1277-1323.

Okabe S. General theory of earth pressures. *J. Japan Society of Civil Engineers*, 1926, 12 (1), p.123-134.

Ortiz LA, Scott RF, Lee J. Dynamic centrifuge test-ing of a cantilever retaining wall, *Earthq. Engng. Struct. Dyn.*, 1983, 11: 251–268.

Psarropoulos PN, Klonaris G and Gazetas G. Seismic earth pressures on rigid and flexible retaining walls. *Soil Dynamics and Earthquake Engineering*, 2005, 25(**7**): 795-809.

Richards R and Elms DG. Seismic behavior of gravity retaining walls. *J Geotech Eng Div*, 1979,105:449–64.

Seed HB and Whitman RV. Design of earth retaining structures for dynamic loads. *ASCE Specialty Conference on Lateral Stresses in the Ground and Design of Earth Retaining Structures*, 1970, Vol. 1, Cornell Univ., Ithaca, N.Y., 103-147.

Theodorakopoulos DD, Chassiakos AP, and Beskos DE. Dynamic pressures on rigid cantilever walls retaining poroelastic soil media. Part I. First method of solution. Soil *Dynamics and Earthquake Engineering*, 2001, 21: 315–338.

Veletsos AS, Younan AH. Dynamic modelling and response of soil-wall systems, *J. Geotech. Engrg.*, 1994, 120 (**12**): 2155–2179.

Wu Y, Prakash S. Effect of submergence on seismic displacement of rigid walls, *Earthquake Geotechnical Engineering*, 1999, Balkema, Rotterdam.

Zeng X. Seismic Response of Gravity Quay Walls. I: Cen-trifuge Modeling, *J. Geotech. Geoenv. Engrg.* 1998, 124(**5**): 406–417.